	OUTLINE DIMENSIONS 3-PHASE INDUCTION MOTOR	MOTOR TYPE: FRAME NO. 445TC

Totally Enclosed Fan Cooled Type. Squirrel-cage Rotor.

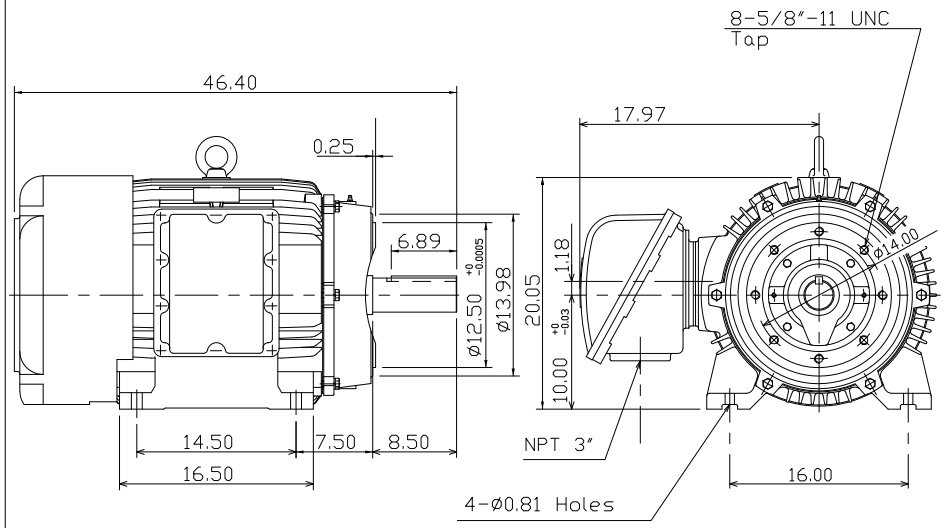

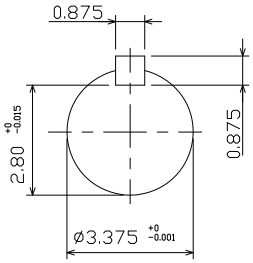

Note:
1. Explosion proof:
   Class I Group D and
   Class II Groud E.F.G.

			BROOK CROMPTON	DWG NO.